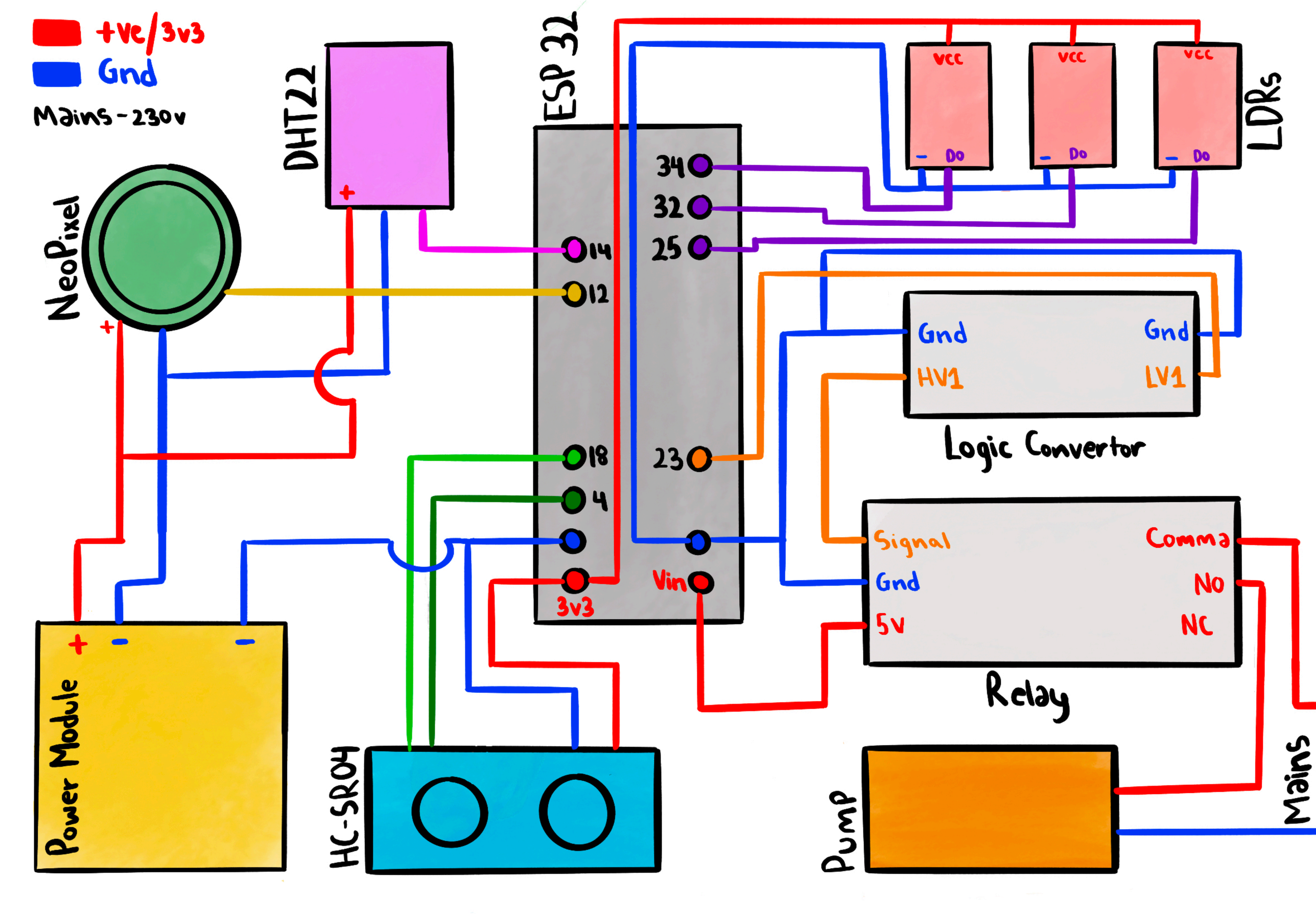
+ve/3v3
Gnd
Mains-230v
DHT22
ESP 32
LDRs
VCC
DO
NeoPixel
34
32
25
14
12
18
4
23
Vin
3v3
Gnd
HV1
Gnd
LV1
Logic Convertor
Signal
Gnd
5v
Comma
NO
NC
Relay
Power Module
HC-SR04
Pump
Mains